LONG SEAMS	
COURSE	ORIENTATION
1(TOP)	0°
2	7°
3	0°

*VERT – TOP TO BOTTOM

Ship loose items:
NONE

**NOTE: INTERNAL PIPING NOT SHOWN FOR CLARITY
SEE SHEET #2 FOR INTERNAL PIPING**

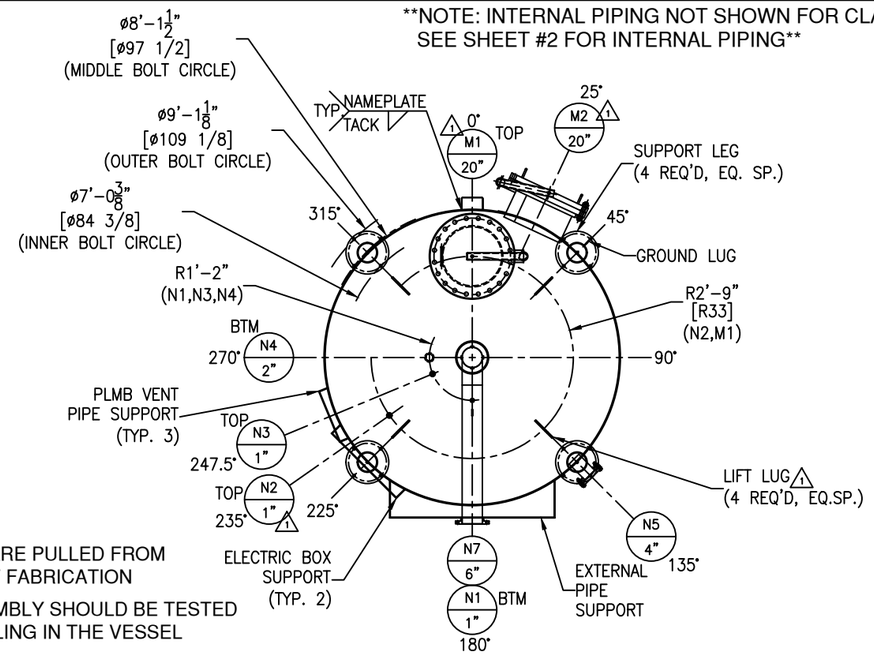

*NOTE: ALL ELEVATIONS ARE PULLED FROM WELD SEAM FOR EASE OF FABRICATION

*NOTE: SPRAY PIPE ASSEMBLY SHOULD BE TESTED OUTSIDE BEFORE INSTALLING IN THE VESSEL

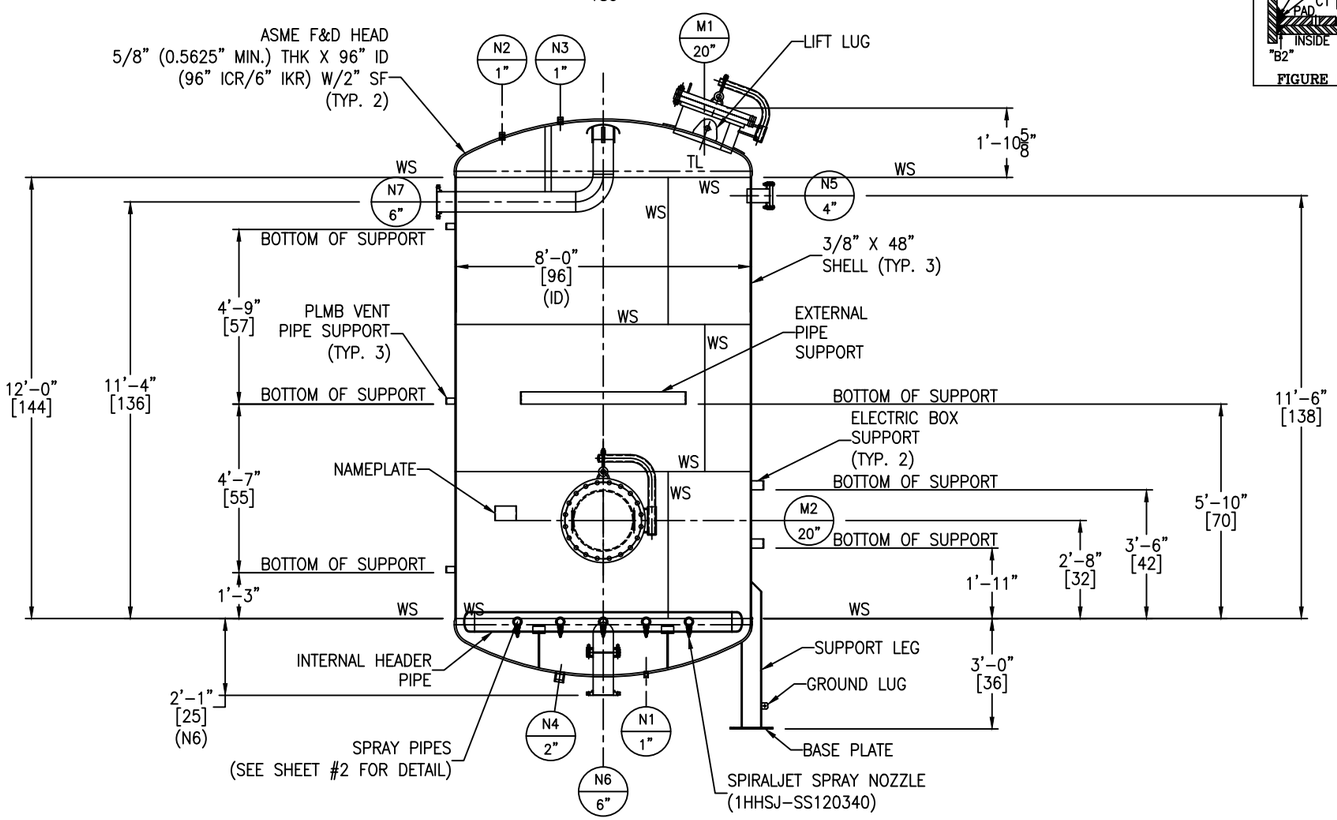

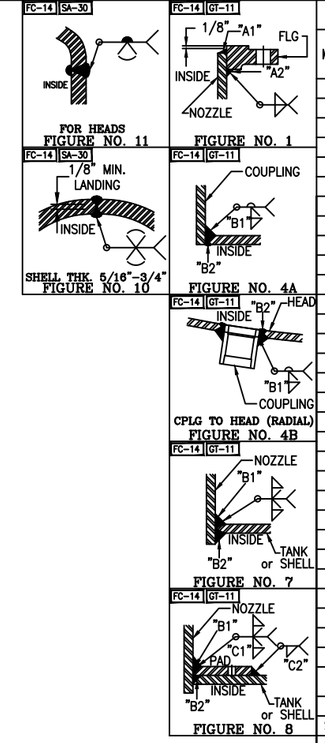

NOZZLE SCHEDULE

MARK	SERVICE	SIZE	RATING	TYPE / STYLE	NECK SCHED.	PROJECTION EXT. (℄)	PROJECTION INT. (MIN.)	WELD FIGURE	REPAD SIZE (WIDTH X THK.)	WELD SIZE "A1"	WELD SIZE "A2"	WELD SIZE "B1"	WELD SIZE "B2"	WELD SIZE "C1"	WELD SIZE "C2"
N1	TANK DRAIN	3/4"	3000#	FULL THRD. CPLG	–	–	–	4A	–	–	–	3/16	1/8	–	–
N2	STEAM VENT	1"	3000#	FULL THRD. CPLG	–	–	–	4A	–	–	–	3/16	1/8	–	–
N3	TANK VENT	1"	3000#	FULL THRD. CPLG	–	–	–	4A	–	–	–	3/16	1/8	–	–
N4	MEDIA REMOVAL	2"	3000#	FULL THRD. CPLG	–	–	–	4B	–	–	–	3/16	1/8	–	–
N5	SPARE	4"	150#	RFSO W/BLIND	40S	6"	1"	1,7	–	1/4	3/8	1/4	1/8	–	–
N6	–	6"	150#	RFSO	40S	SEE DWG	SEE DWG	1,7	–	1/4	7/16	5/16	1/8	–	–
N7	–	6"	150#	RFSO W/ELBOW	40S	6"	SEE DWG	1,7	–	1/4	7/16	5/16	1/8	–	–
M1	ROOF MANWAY	20"	150#	RFSO W/DAVIT	1/2"	SEE DWG	1"	1,8	4" X 1/2"	1/4	9/16	3/8	1/8	1/2	3/8
M2	SHELL MANWAY	20"	150#	RFSO W/DAVIT	1/2"	10"	1"	1,8	2 1/2" X 3/16"	1/4	9/16	3/16	1/8	3/16	3/16

MATERIALS OF CONSTRUCTION

	VESSEL
SHELL	SA240-316/316L
HEADS	SA240-316/316L
RIM ANGLE	–
NOZZLE NECKS	SA312-316/316L WLD & SA403-316/316L WPB
NOZZLE FLANGES	SA182F-316/316L
MANWAY NECKS	SA240-316/316L
MANWAY FLANGES	SA182F-316/316L
GASKETS	GARLOCK 3000
BOLTS/STUDS	SA193-B7 (ZINC PLATED)
NUTS	SA194-2H (ZINC PLATED)
REPADS	SA240-304-304L
COUPLINGS	SA182F-316/316L
SUPPORTS/HOLD DOWNS	SA312-304/304L WLD & SA240-304/304L
LIFTING LUGS	SA240-304/304L
INTERNAL PIPE HEADER	SA312-316/316L WLD
INTERNAL COUPLINGS	SA182F-316-316L
GROUND LUG	SA240-304/304L
SPRAY NOZZLES	SS316
PIPE CAP	SA403-316/316L WPB
INTERNAL PIPE SUPPORTS	SA240-316/316L & SA312-316/316L WLD
INTERNAL BOLTS	SA193-B8M
INTERNAL NUTS	SA194-8M
PLATFORM	–
PLATFORM CLIPS	–
DIPTUBE SUPPORT	–
JACKET SHELL	–
JACKET HEADS	–
JACKET NOZZLE NECKS	–
JACKET NOZZLE FLANGES	–

DESIGN DATA

	VESSEL
DESIGN AND FAB. CODE	ASME
CERT. STAMP REQ'D.	YES
DESIGN PRESSURE	100 PSIG
DESIGN TEMPERATURE	250° F
MIN. DESIGN METAL TEMP.	-20° F @ 100 PSIG
OPERATING PRESSURE	–
OPERATING TEMPERATURE	–
JOINT EFFICIENCY HEADS	0.85
JOINT EFFICIENCY SHELL	0.70
CORROSION ALLOWANCE	0"
SPECIFIC GRAVITY	1.0
EARTHQUAKE ZONE	Ss = (0.360) S1 = (0.083)
WIND LOAD	109 MPH
STRESS RELIEF	NOT REQ'D
RADIOGRAPHIC EXAM	NOT REQ'D
DYE PENETRANT EXAM	NOT REQ'D
MAGNETIC PARTICLE EXAM	NOT REQ'D
HYDROSTATIC TEST	NOT REQ'D
PNEUMATIC TEST	110 PSIG / GAUGE #9
JKT DESIGN AND FAB. CODE	–
JKT CERT. STAMP REQ'D.	–
SPRAY ASSEMBLY DESIGN PRESSURE	100 PSIG
SPRAY ASSEMBLY DESIGN TEMPERATURE	250° F
JKT MIN. DESIGN METAL TEMP.	–
JKT OPERATING PRESSURE	–
JKT OPERATING TEMPERATURE	–
JKT JOINT EFFICIENCY HEADS	–
JKT JOINT EFFICIENCY SHELL	–
SPRAY ASSEMBLY HYDRO TEST	110 PSIG/ GAUGE#9

VESSEL FINISH

INTERIOR WELD TREATMENT:	SAV TANK STANDARD
EXTERIOR WELD TREATMENT:	SAV TANK STANDARD
SAV TANK FINISHING STANDARD:	SEE NOTE 6
INSULATION:	N/A
PAINTING:	N/A

VESSEL CAPACITY AND WEIGHTS

OPERATING CAPACITY	–
FULL CAPACITY	5,260 GAL.
EMPTY SHIPPING WEIGHT	12,000 LBS.
WEIGHT FULL OF WATER	55,900 LBS.
WEIGHT FULL OF PRODUCT	55,900 LBS.

ASME SECT. VIII, DIV. 1
2023 EDITION

ENG. _____ DATE: _____

Q.C. _____ DATE: _____

A.I. _____ DATE: _____

This drawing is issued for customer approval. please review, make approval changes (if any) in red. check the appropriate box, sign & date.

- ☐ Approval – no changes. Please proceed with fabrication.
- ☐ Approved as noted. Please proceed with fabrication
- ☐ Not approved. Please make changes and resubmit.

Customer signature _____ Date _____

GENERAL NOTES

1.) COVER ALL FLANGES, OPENINGS & MACHINED SURFACES PRIOR TO SHIPMENT UNLESS OTHERWISE NOTED.
2.) BOLT HOLES TO STRADDLE 0° & 180° UNLESS OTHERWISE NOTED.
3.) REPADS TO HAVE (1) ø1/4" NPT TELL-TALE HOLES FOR PNEUMATIC TESTING AT 2 PSIG FOR PRESSURE RETAINING PARTS. ALL OTHER REPADS TO HAVE (1) ø1/4" WEEP HOLE AT LOWEST POINT ON PAD.
4.) ASME CODE VESSELS TO BE IN ACCORDANCE WITH UG-80 & UG-81. TOLERANCES: +/- 1/8" FOR DIMENSIONS AND +/- 2 DEGREES FOR ORIENTATIONS.
5.) ASME MATERIALS TO CONFORM TO THE FOLLOWING: FLANGES – B16.5, FITTINGS – B16.9 & COUPLINGS – B16.11.
6.) PICKLE ALL EXTERIOR WELDS. PASSIVATE INTERIOR & EXTERIOR OF VESSEL.

REV	D.BY	C.BY	DATE	DESCRIPTION
2				AS BUILT
1	RS	NP	5/5/25	CERTIFIED
0	AD	RS	3/10/25	APPROVAL

1 REVISIONS

Savannah Tank & Equipment Corp.
1517 Telfair Road, Savannah, GA 31415
(912) 233-8902

DRAWN BY: AD
CHK'D BY: RS
APPROVED BY: NP
SCALE: 3/8" = 1'-0"

ZACHARY
FILTER TANK
EQUIP. #
CUST. PO #115140-630139

DRAWING NO.: 039-25-1 SHT 1 OF 5 REV. SET 1

FC-14

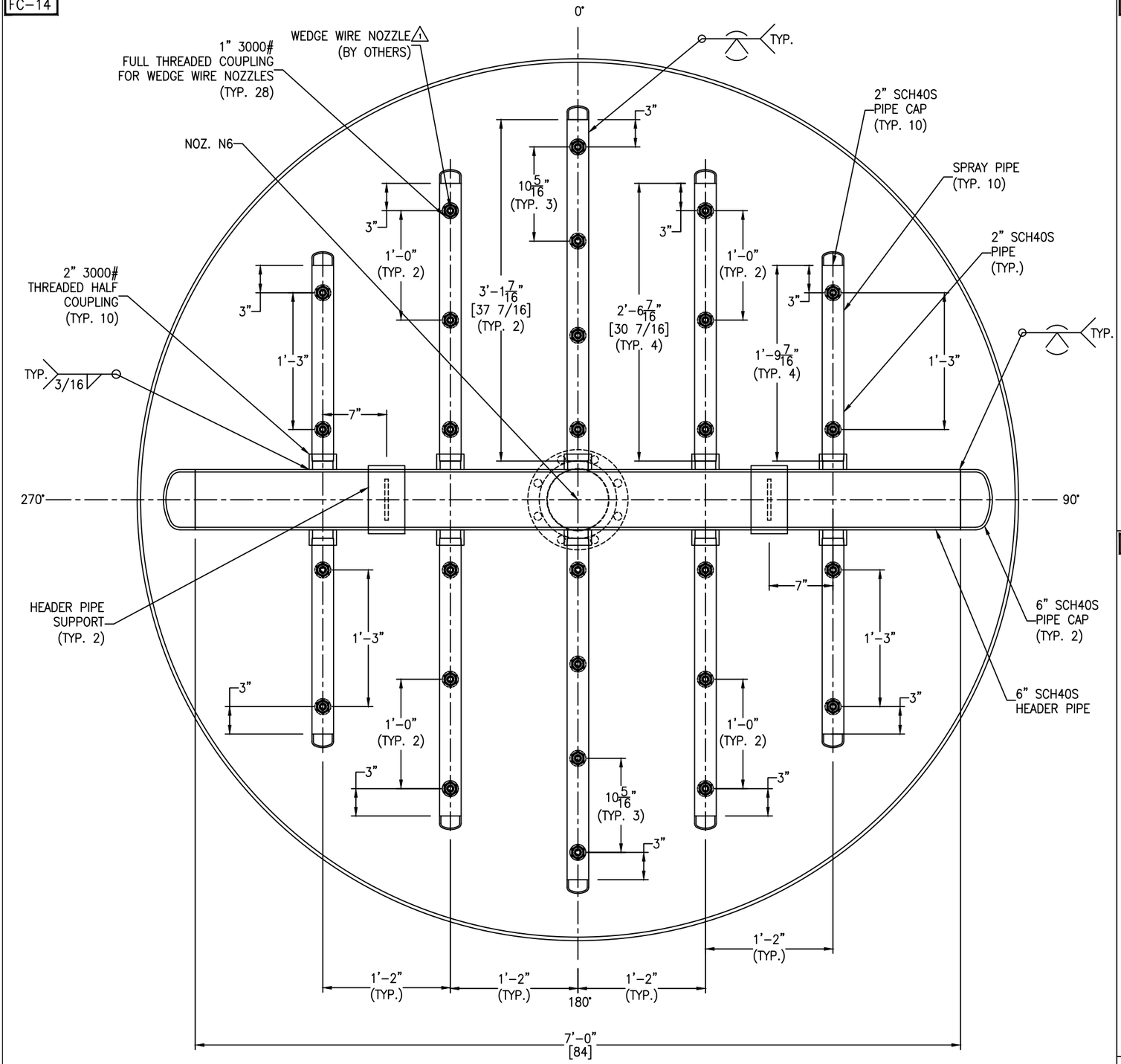

INTERNAL SPRAY PIPING DETAIL

SCALE: 1 1/2" = 1'-0"

FC-14

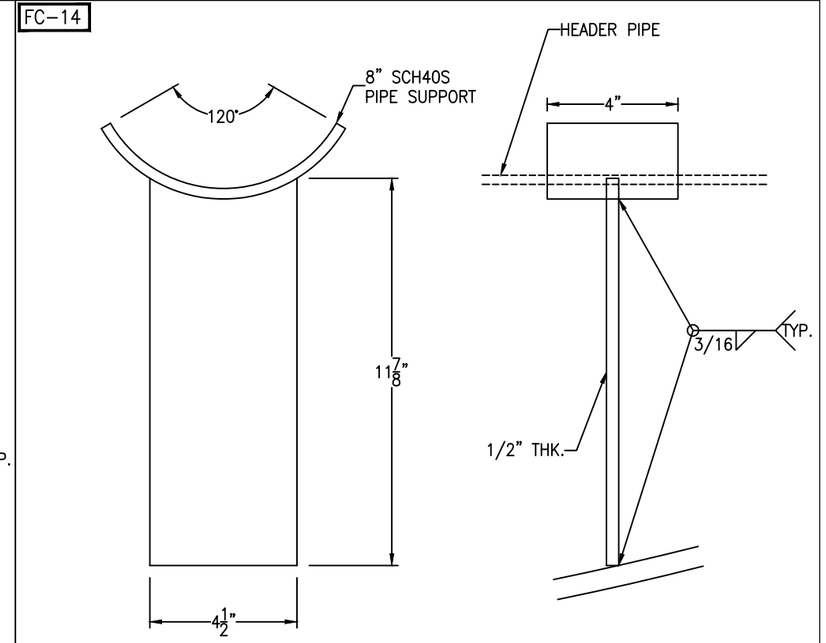

HEADER PIPE SUPPORT DETAIL

SCALE: 4" = 1'-0"

FC-14

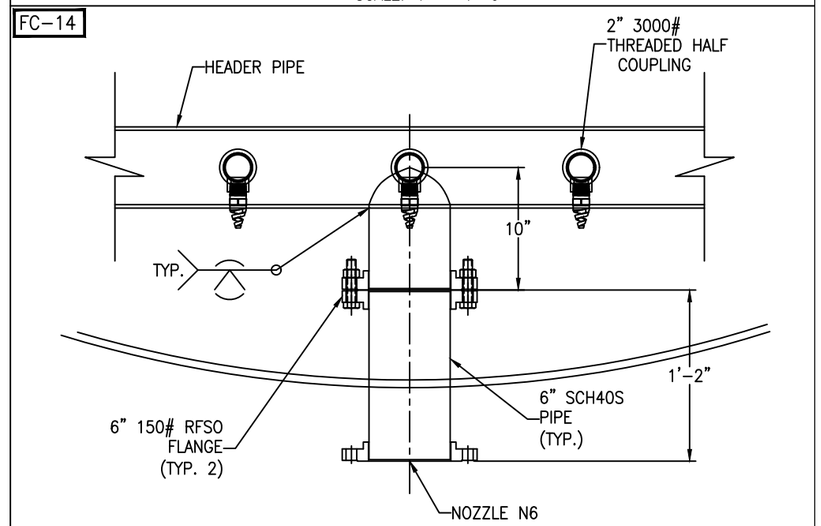

Bolting for Nozzle N6 inner flange
N6 Inner Flange: (8) 3/4"-10 NC x 3 1/2" HH BOLT (SA193-B8M)
(8) 3/4"-10 NC HH NUT (SA194-8M)
(1) 6" 150# RING GASKET X 1/8" THK (GARLOCK 3000)

NOZZLE N6 TO HEADER PIPE WELD DETAIL

SCALE: 1 1/2" = 1'-0"

REV	D.BY	C.BY	DATE	DESCRIPTION
2				AS BUILT
1	RS	NP	5/5/25	CERTIFIED
0	AD	RS	3/10/25	APPROVAL

1 REVISIONS

Savannah Tank & Equipment Corp.
1517 Telfair Road, Savannah, GA 31415
(912) 233-8902

DRAWN BY: AD
CHK'D BY: RS
APPROVED BY: NP
SCALE: 1 1/2" = 1'-0"

ZACHARY
FILTER TANK
EQUIP. #
CUST. PO #115140-630139

DRAWING NO.: 039-25-2 SHT 2 OF 5 REV. SET 1

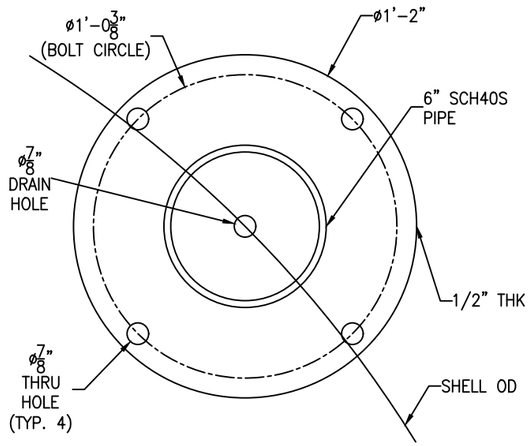

BASE PLATE DETAIL

(4 REQ'D) SCALE: 3" = 1'-0"

FC-14

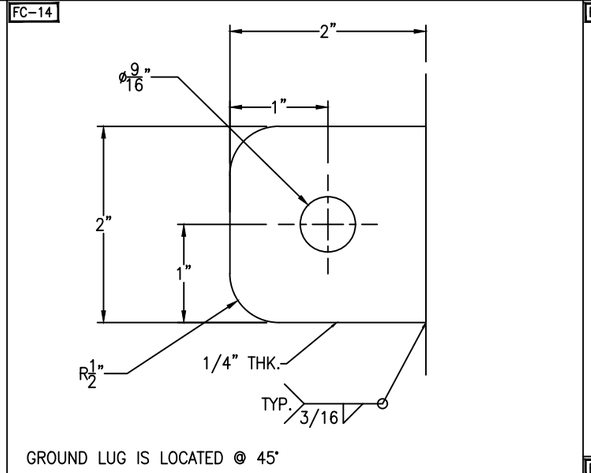

GROUND LUG IS LOCATED @ 45°

GROUND LUG DETAIL

(1 REQ'D) SCALE: 1'-0" = 1'-0"

FC-14

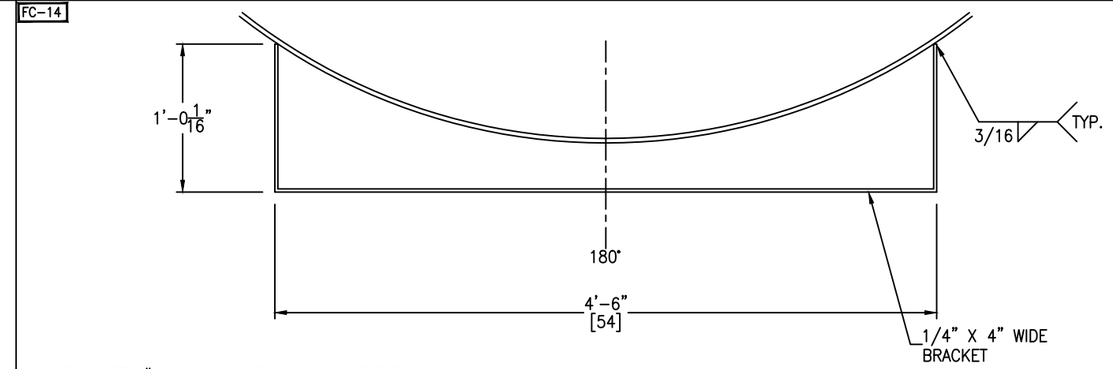

SEE SHEET #1 FOR ELEVATION AND ORIENTATION

EXTERNAL PIPING SUPPORT DETAIL

(1 REQ'D) SCALE: 1 1/2" = 1'-0"

FC-14

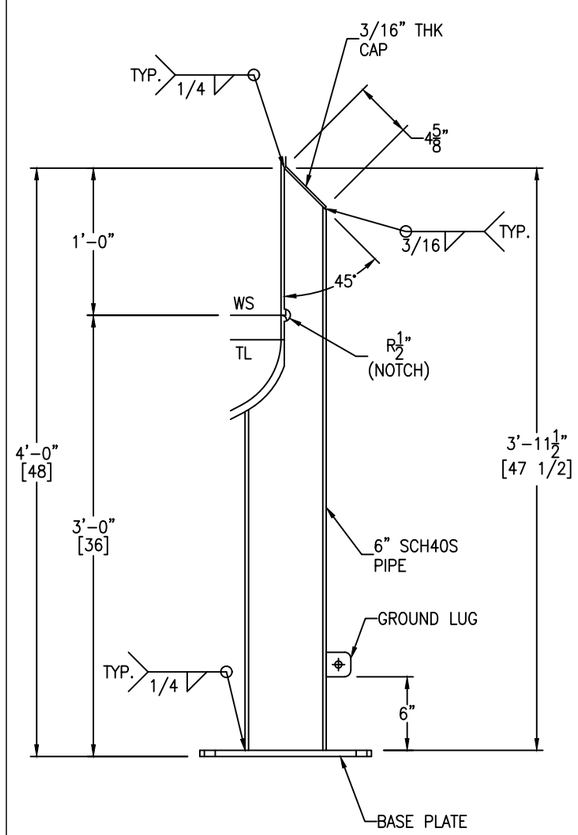

SUPPORT LEG DETAIL

(4 REQ'D) SCALE: 1 1/2" = 1'-0"

FC-14

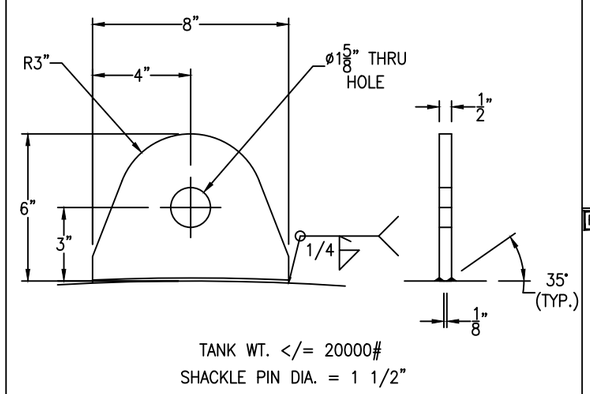

TANK WT. <= 20000#
SHACKLE PIN DIA. = 1 1/2"

LIFT LUG DETAIL

(4 REQ'D) SCALE: 3" = 1'-0"

FC-14

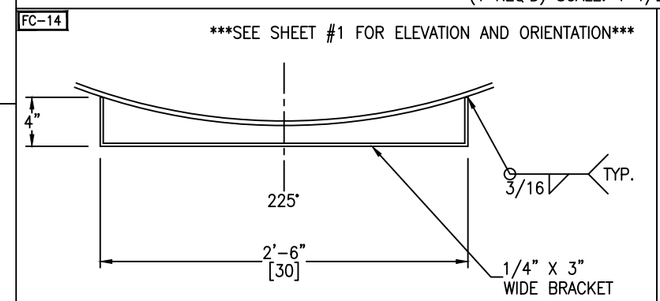

SEE SHEET #1 FOR ELEVATION AND ORIENTATION

ELECTRIC BOX SUPPORT DETAIL

(2 REQ'D) SCALE: 1 1/2" = 1'-0"

*CUT THE STRAIGHT PART AND INSTALL.

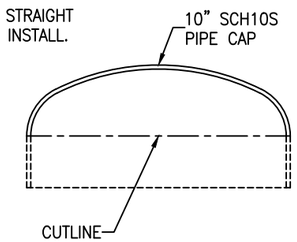

⚠1 N7 CAP CUTOUT DETAIL

SCALE: 3" = 1'-0"

FC-14

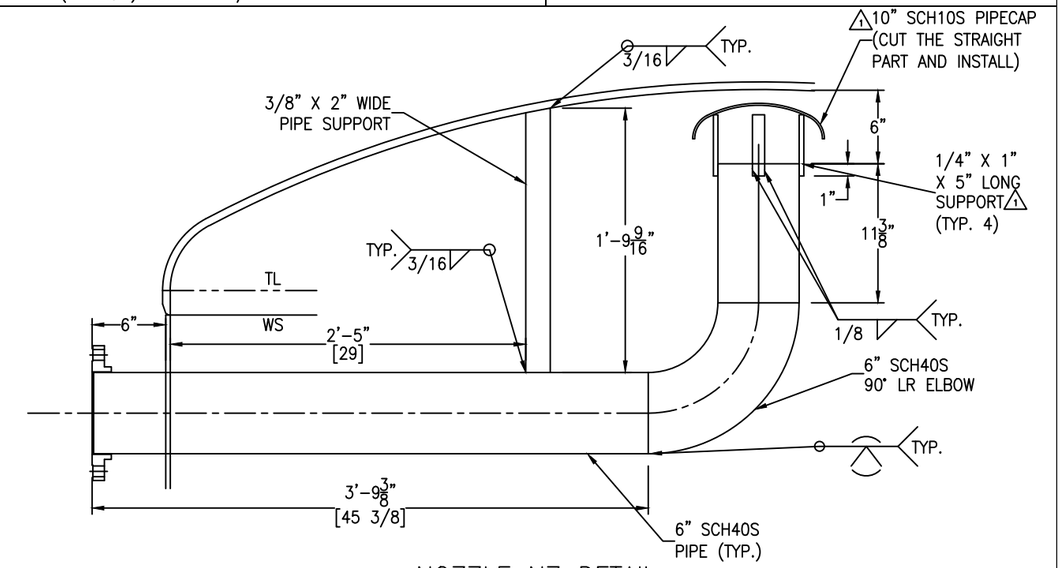

NOZZLE N7 DETAIL

SCALE: 1 1/2" = 1'-0"

FC-14

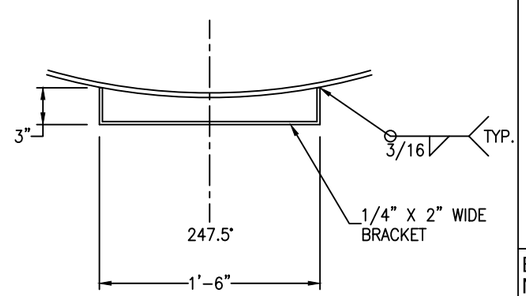

SEE SHEET #1 FOR ELEVATION AND ORIENTATION

PLMB VENT PIPE SUPPORT DETAIL

(3 REQ'D) SCALE: 1 1/2" = 1'-0"

Bolting for blinds
N5: (8) 5/8"-11 NC x 3" HH BOLT
(8) 5/8"-11 NC HH NUT
(1) 4" 150# RING GASKET X 1/8" THK

REV	D.BY	C.BY	DATE	DESCRIPTION
2				AS BUILT
1	RS	NP	5/5/25	CERTIFIED
0	AD	RS	3/10/25	APPROVAL

⚠1 REVISIONS

Savannah Tank & Equipment Corp.
1517 Telfair Road, Savannah, GA 31415
(912) 233-8902

DRAWN BY: AD
CHK'D BY: RS
APPROVED BY: NP
SCALE: 3/8" = 1'-0"

ZACHARY
FILTER TANK
EQUIP. #
CUST. PO #115140-630139

DRAWING NO.: 039-25-3 | SHT 3 OF 5 | REV. SET 1

FC-14

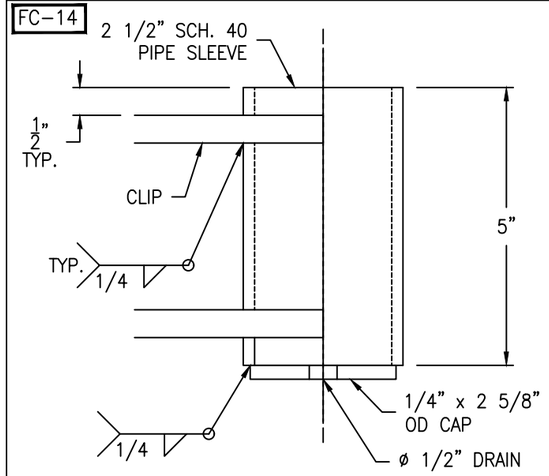

SLEEVE DETAIL

(1 REQ'D) SCALE: 6" = 1'-0"

FC-14

Bolting for blind
(20) 1 1/8-7 NC x 6 1/2" FULL THREADED STUD
(40) 1 1/8-7 NC HH NUT
(1) 20" 150# RING GASKET x 1/8"

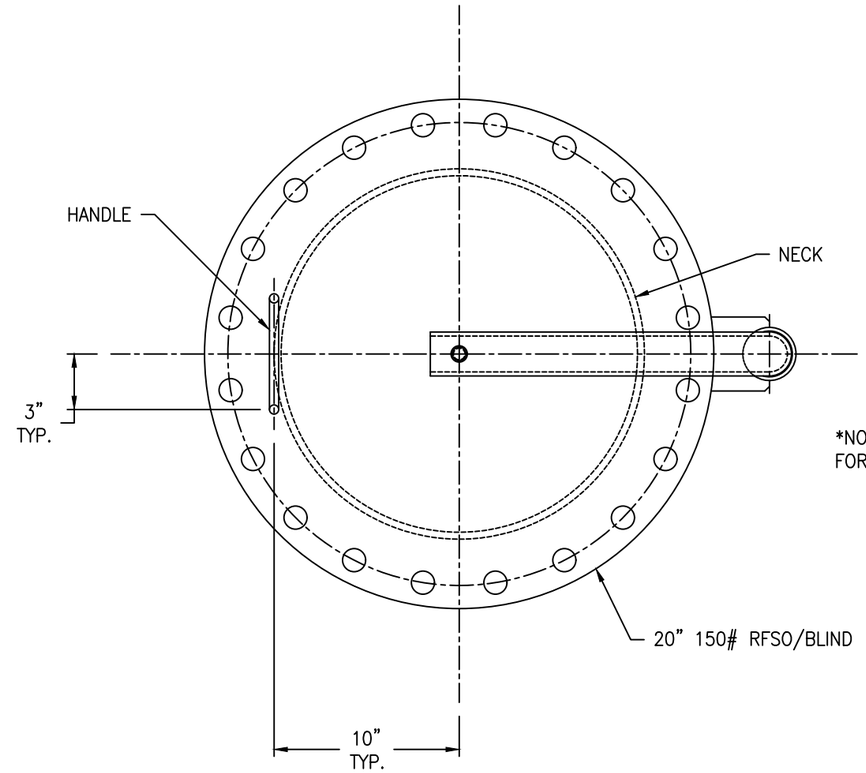

*NOTE: SEE VESSEL ORIENTATION FOR DAVIT LOCATION

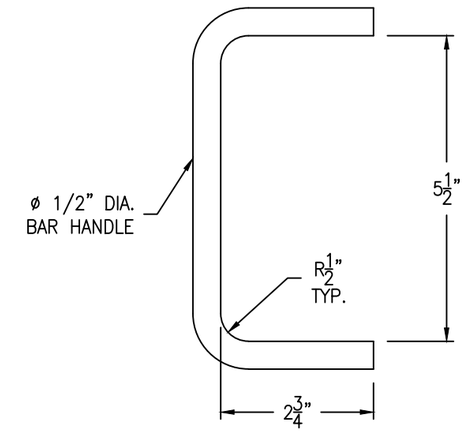

HANDLE DETAIL

(1 REQ'D) SCALE: 6" = 1'-0"

FC-14

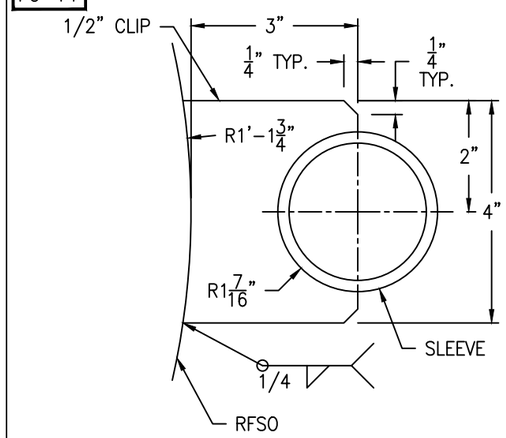

UPPER CLIP DETAIL

(1 REQ'D) SCALE: 6" = 1'-0"

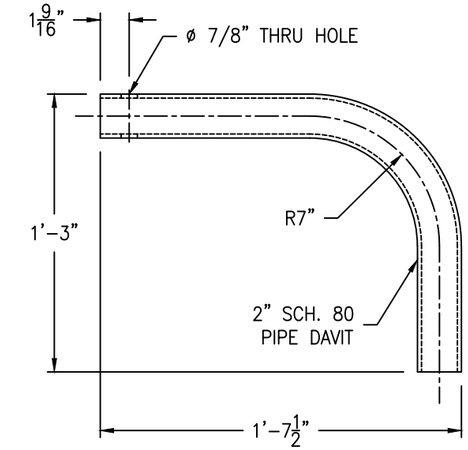

DAVIT ARM DETAIL

(1 REQ'D) SCALE: 2" = 1'-0"

FC-14

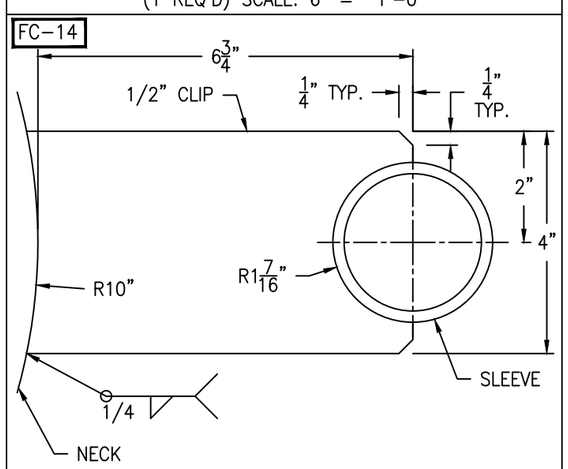

LOWER CLIP DETAIL

(1 REQ'D) SCALE: 6" = 1'-0"

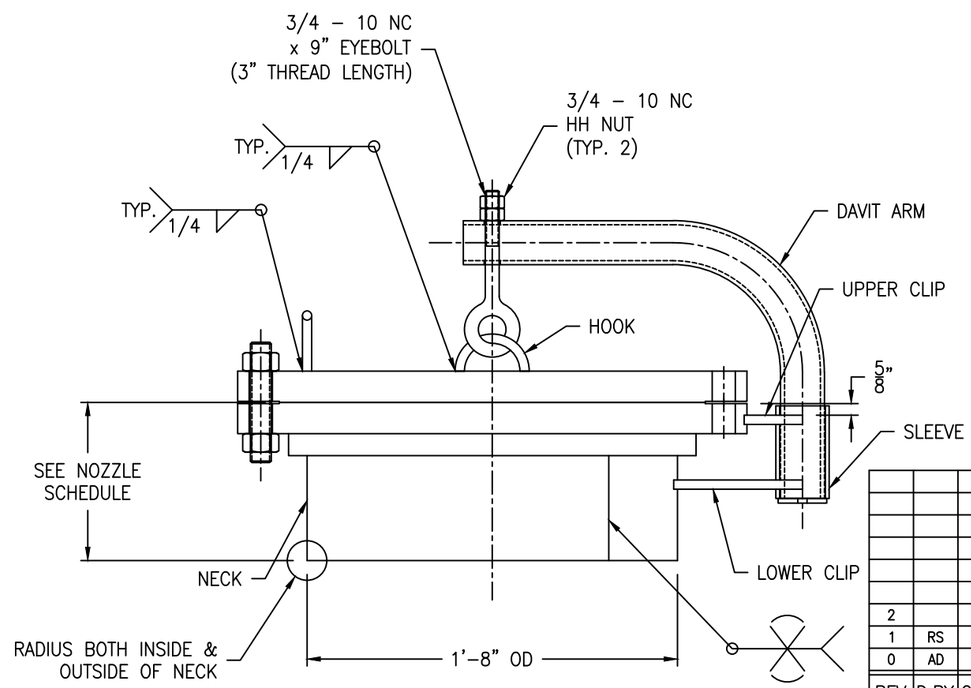

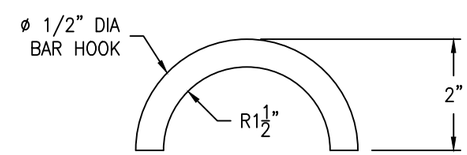

HOOK DETAIL

(1 REQ'D) SCALE: 6" = 1'-0"

REV	D.BY	C.BY	DATE	DESCRIPTION
2				AS BUILT
1	RS	NP	5/5/25	CERTIFIED
0	AD	RS	3/10/25	APPROVAL

1 REVISIONS

Savannah Tank & Equipment Corp.
1517 Telfair Road, Savannah, GA 31415
(912) 233-8902

DRAWN BY:	AD
CHK'D BY:	RS
APPROVED BY:	NP
SCALE:	2" = 1'-0"

ZACHARY
FILTER TANK
EQUIP. #
CUST. PO #115140-630139

DRAWING NO.: 039-25-4 SHT 4 OF 5 REV. SET 1

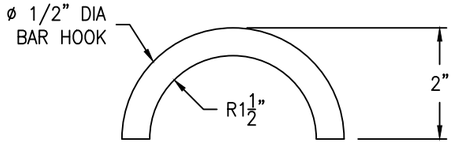

HOOK DETAIL

(1 REQ'D) SCALE: 6" = 1'-0"

FC-14

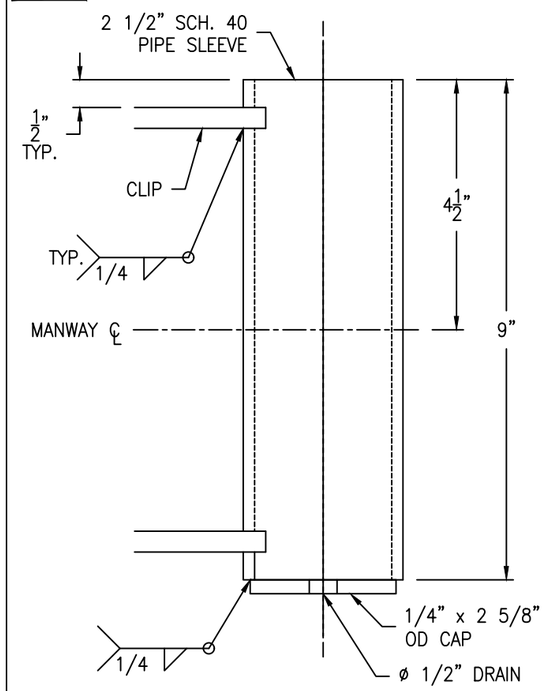

SLEEVE DETAIL

(1 REQ'D) SCALE: 6" = 1'-0"

FC-14

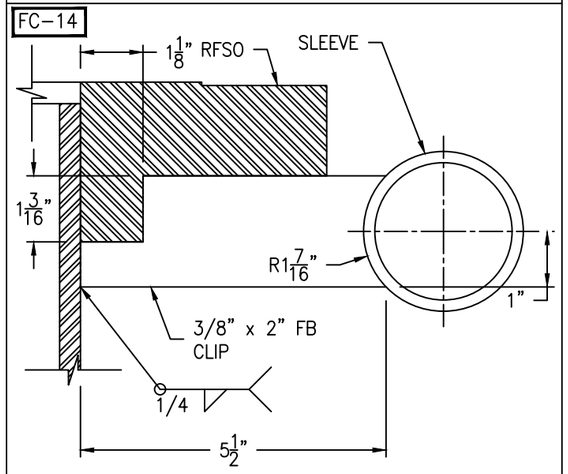

CLIP DETAIL

(2 REQ'D) SCALE: 6" = 1'-0"

FC-14

Bolting for blind
(20) 1 1/8-7 NC x 6 1/2" FULL THREADED STUD
(40) 1 1/8-7 NC HH NUT
(1) 20" 150# RING GASKET x 1/8"

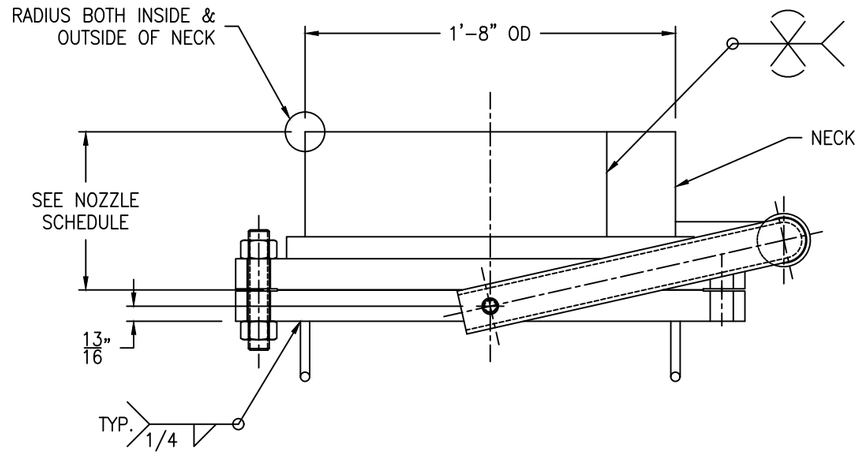

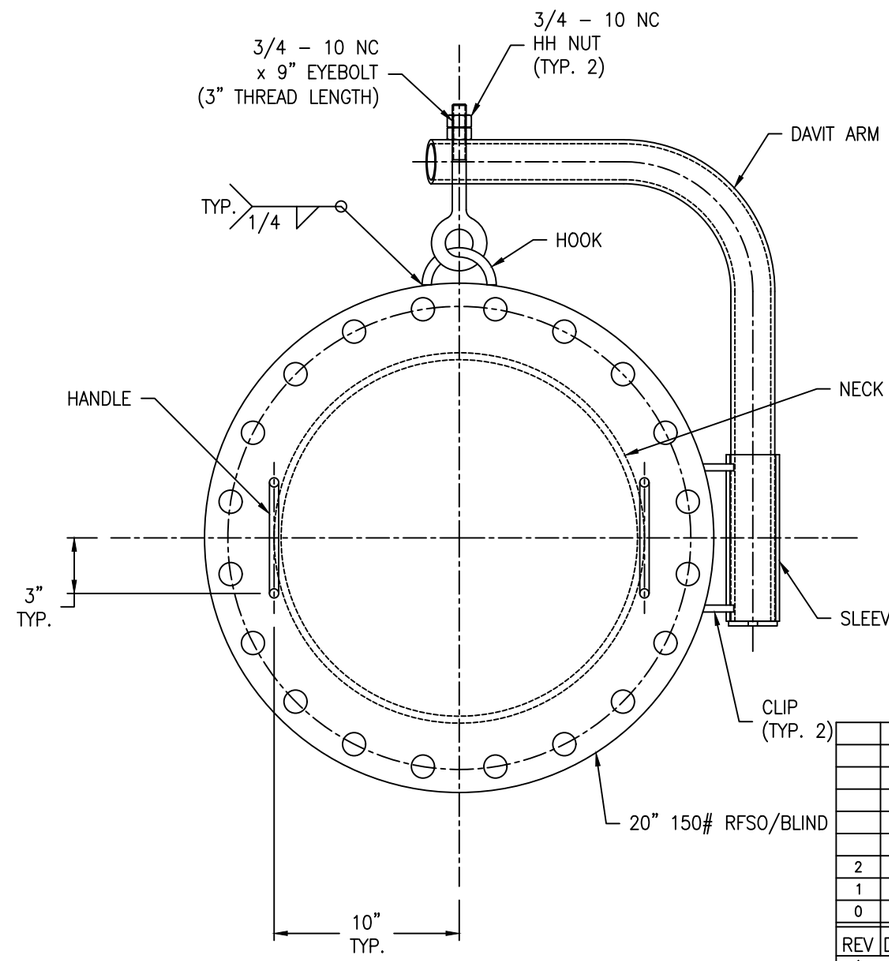

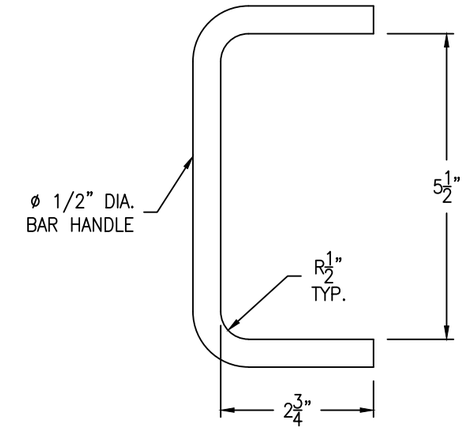

HANDLE DETAIL

(2 REQ'D) SCALE: 6" = 1'-0"

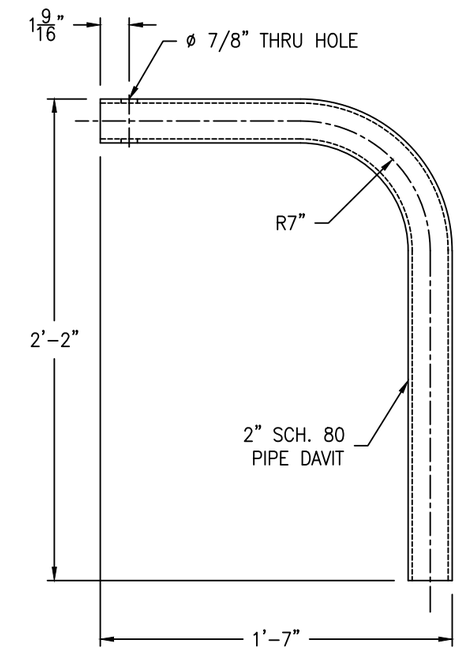

DAVIT ARM DETAIL

(1 REQ'D) SCALE: 2" = 1'-0"

REV	D.BY	C.BY	DATE	DESCRIPTION
2				AS BUILT
1	RS	NP	5/5/25	CERTIFIED
0	AD	RS	3/10/25	APPROVAL

1 REVISIONS

Savannah Tank & Equipment Corp.
1517 Telfair Road, Savannah, GA 31415
(912) 233-8902

DRAWN BY: AD
CHK'D BY: RS
APPROVED BY: NP
SCALE: 2" = 1'-0"

ZACHARY
FILTER TANK
EQUIP. #
CUST. PO #115140-630139

DRAWING NO.: 039-25-5 SHT 5 OF 5 REV. SET 1